MERCURY (25)
Serial Nbr Range: 9378116 THRU 9415100 (BEL)

GEAR HOUSING (Prop Shaft) (Screw Inserted from Top)

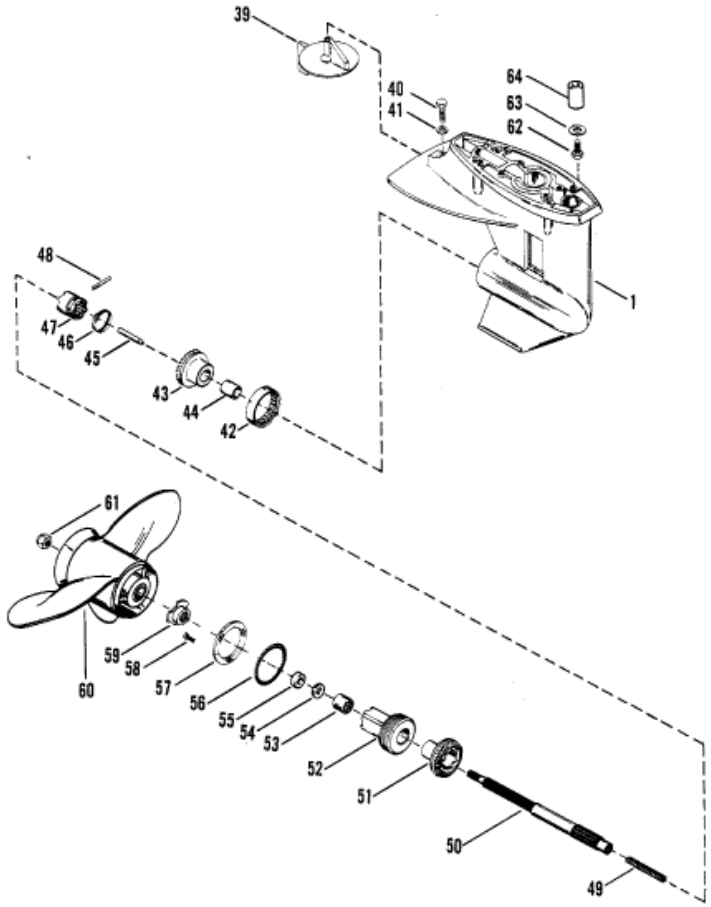

Parts List

Ref	Class	Part	Description	Qty	Comment	Footnote
-	1665	8669A 3	GEAR HOUSING ASSEMBLY, COI	1	SHORT SHAFT	
-	1665	8669A 4	GEAR HOUSING ASSEMBLY, COI	1	LONG SHAFT	
1	1665	8669A 2	GEAR HOUSING ASSEMBLY	1		
39		44138	TRIM TAB	1		
40	10	40003 55	SCREW, TRIM TAB (35MM)	1		
41	12	70132	WASHER, TRIM TAB SCREW	1		
42	31	99328A 1	ROLLER BEARING ASSEMBLY,	1		
43	43	99220A 1	FORWARD GEAR	1		
44	23	85557	BUSHING, FORWARD GEAR	1		
45		85094	CAM FOLLOWER	1		
46	24	38114	SPRING, RETAINING - CROSS I	1		
47	52	41040	CLUTCH, SLIDING	1		
48	17	85093	CROSS PPIN, CLUTCH TO PRO	1		
49	24	88680	SPRING, COMPRESSION - PRO	1		
50	44	99740	PROPELLER SHAFT	1		
51	43	99542	REVERSE GEAR	1		
52		99906A 1	BEARING CARRIER ASSEMBLY	1		
53	31	21739	ROLLER BEARING	1		
54	26	41132	OIL SEAL, BEARING CARRIEF	1		12
55	26	41131	OIL SEAL, BEARING CARRIEF	1		12
56	25	85549	"O" RING, BEARING CARRIER	1		12,15
57		87293	PLATE, GEAR HOUSING	1		
58	10	91909	SCREW, COVER TO GEAR HOL	3		
59		85128A 1	THRUST HUB ASSEMBLY, PROP	1		
60	48	86848A 4	PROPELLER ASSEMBLY	1		
61	11	88228	PROPELLER NUT	1		
62	10	43215	SCREW, GEAR HOUSING (25MM	4		
63	12	43328	WASHER, GEAR HOUSING SCRE	4		
64	23	41589	SPACER, GEAR HOUSING SCRE	4		
--	26	85090A1	SEAL REPAIR KIT	--	CONTENTS INDICATED BY FOO	
--	27	41499A84	GASKET SET	--	CONTENTS INDICATED BY FOO	